INDUSTRIAL PROCESS HEATERS

TANK / VESSEL / REACTOR

TURNKEY PROJECTS
& CONSULTANCY

www.integrogroup.in

INTEGRO
GROUP
DELIVERING SOLUTION

About Us

Integro Engineers Pvt. Ltd has been providing technical solutions to various industries since 1998. Integro possesses excellent skills and capabilities in providing complete integrated Design, Engineering, Procurement, Construction and Project Management Services in areas as diverse as Food, Pharma, Process Industry, Steel, Cement, Power Plants, Oil & Gas.

Achieving the highest quality standards and sustaining them over an extended period of time has been the cornerstone of our success over the past two decades. As a reflection of our international quality standards, construction and project management techniques, we hold ISO 9001:2015.

Our Distinctive Competencies

Value Engineering, Design Capabilities and custom designed innovative solutions are our core competencies. We have an inhouse facility for mechanical, electrical, instrumentation and automation design/ engineering. In addition to this, we have an excellent capability in manufacturing, supply, installation, testing and commissioning. This gives us an edge over the competition and the preference as a Turnkey Project Company, since there is an ever increasing demand for the companies who are capable of Turnkey Services and act as a single sourcing to the clients.

In the field of industrial process heating, with the investment of 2 decades and reasonably good amount of money in R&D, today we are know as "Process Heating Specialists" having provided specialized heating solutions in diverse fields.

Infrastructure and Facilities

Our manufacturing facility is at Surajpur Industrial area Greater Noida (India) having highly trained manufacturing team, efficient QC department, all inhouse manufacturing and testing facilities required for manufacturing of our products. In addition to this, we have highly experienced design and projects team. The dedicated professionals take project from concept through completion and review each project needs to make design recommendations based on the application and code requirement.

Our sales & marketing, costing & estimation, admin and finance teams are trained to be customer oriented, to provide immediate support and assistance to the client in their respective fields.

Having a successful track record of executing turnkey projects for various companies and providing the custom designed heating solutions to various industries, Integro remains a preferred choice because of our innovative, efficient and cost effective solutions along with the ability to manage operations in diverse industries and economies, coupled with our excellent track record in mobilizing human resources and more flexible services.

Over the last two decade we have worked hard to provide long-term support and service to our customers. The expanding list of satisfied clients reflects our ability to execute challenging projects, despite all odds. Our average customer has been with us for more than 15 years, and several for the lifetime of the company. The percentage of repeat orders stand testimony to this.

Work Culture & HSSE Policy

We encourage a culture of safety and safe work practices. We have our own HSSE policy which is dedicatedly followed by each and every employee of the company and all our staff is regularly trained on safety and environment. We learn through the challenges we constantly face and explore new ways to improve our design, technology and processes. By focusing on developing engineering and control systems that reduce hazards and support compliance, capability and performance, we look to ensure all our people are safe and secure in the environment they work in. We make health and safety our overriding priority.

Core Objective

The Core Objective of our Business have evolved upon the confidence reposed by our valuable clients through close association, undertaking their specific requirements and providing them with guaranteed delivery of product and services – both high quality and economically competitive. Our Real Profit is our Satisfied Customer Base

Area of operation: Pan India Africa, Middle East.

INTEGRO GROUP
DELIVERING SOLUTION

PRODUCT CATALOGUE






www.integrogroup.in

INDEX

INDUSTRIAL PROCESS HEATERS

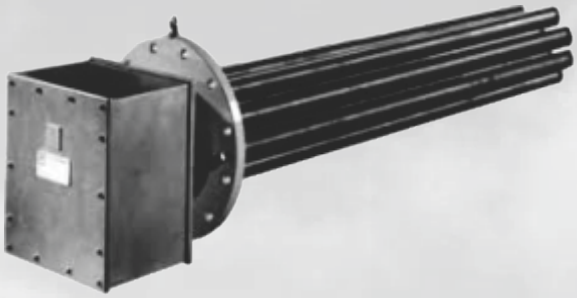

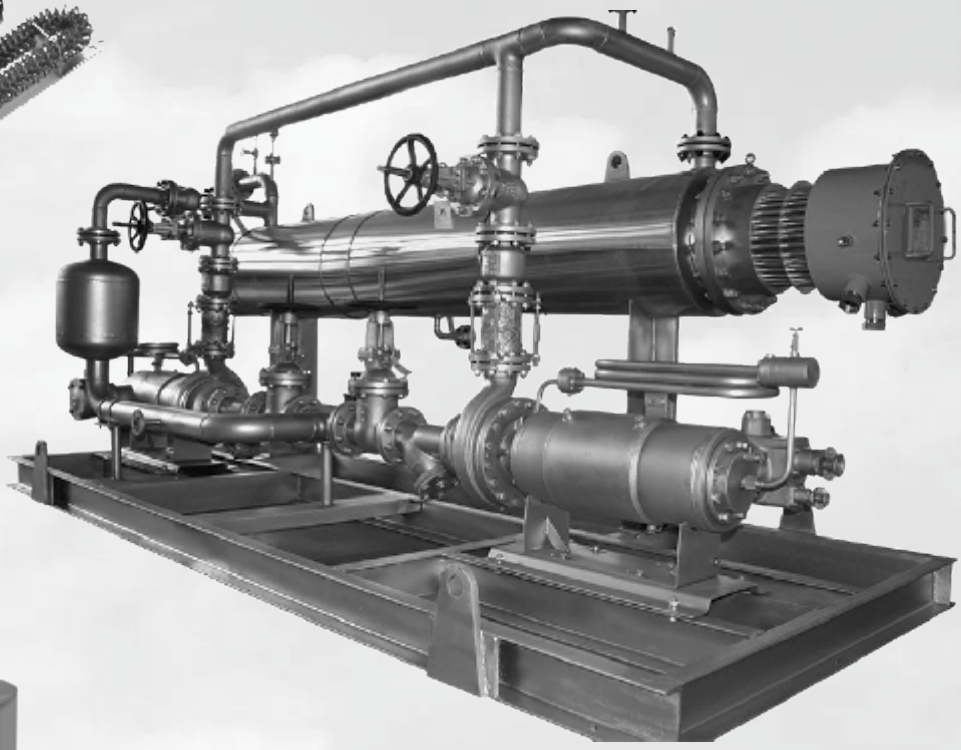

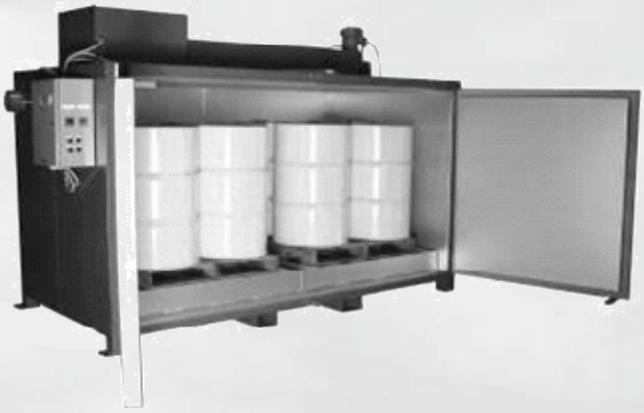

Storage Tank Heaters

Immersion Heaters

Immersion heaters are designed for direct contact heating of water, oils, viscous materials, solvents, process solutions and gases. Since all heat is generated within the liquid or process, virtually 100% energy efficiency is achieved. Various temperature control options permit very tight process temperature control. Basic mounting options of threaded screw plug connections, flanges or simple over-the-side designs facilitate customer installation. A large selection of designs is available from stock for immediate delivery. Products are available for heating any fluid, from plain water to corrosive solutions, highly viscous oils and for many specialized applications such as high pressure and hazardous areas. Custom engineered designs are also routinely manufactured by Integro.

Flanged Immersion Heaters

Flanged industrial immersion heaters are used for raising the temperature of fluids inside the tanks and vessels. They mate to a companion flange that is welded to a tank wall. Comprising of ANSI rated flange with tubular elements extending from the face of the flange or cartridge type heaters fitted in tubes. In addition to adherence to very stringent industrial requirements, safety and reliability with optimized performance is the hallmark of our heaters.

Features

- Efficient Heat Transfer
- Ease of installation
- Low maintenance
- Wattage as per the process requirement
- Thermostatic control/RTD provided for precise temperature control.
- Low Watt Density Heaters used for longer life.
- MOC: MS/SS
- Heaters: Removable cartridge type heaters or tubular heater bundles.
- Available in voltages 415/230/110V
- Totally sealed weather-proof terminal box.
- Mating flange (Optional)
- Control panel (Optional)
- Standard Ratings available: 3, 6, 9, 12, 18, 24, 30, 36, 45KW with removable Cartridge type heating element which facilitates the replacement of faulty element externally without draining the storage tank.
- Higher ratings for large size tanks are available in hair pin bent tubular elements welded or brazed with flanges.
- Length: Up to 240"
- Power ratings: Up to 2,000 KW
- Flange material: Brass, steel, or stainless steel
- Sheath material: Copper, Steel, Stainless Steel, Incoloy.

Outflow Heaters

Outflow Heaters are ideal for storage/ day tanks to draw viscous liquids / oils at a prerequisite temperature or controlled temperature. The liquid/oil coming out of the tank gets heated instantly and reduces load on the motor of the transfer pump. Fitted radically, removable cartridge type heaters are used for ease of operation which allows the inspection or replacement of heating element without draining the tank.

Features

- Efficient Heat Transfer.
- Ease of Installation.
- Low maintenance.
- Wattage as per the process requirement.
- Thermostatic control/RTD provided for precise temperature control.
- Low Watt Density Heaters used for longer life.
- Heaters: Removable cartridge type heaters.
- Totally sealed Weather/Flame proof Terminal box.
- Custom Built.
- MOC : CS/SS.
- Mating Flange (Optional).
- Control panel (Optional).
- Available in voltages 415/230/110V.
  Standard Ratings available: 3, 6, 9, 12, 18, 24, 30, 36, 45KW with removable Cartridge type heating element.

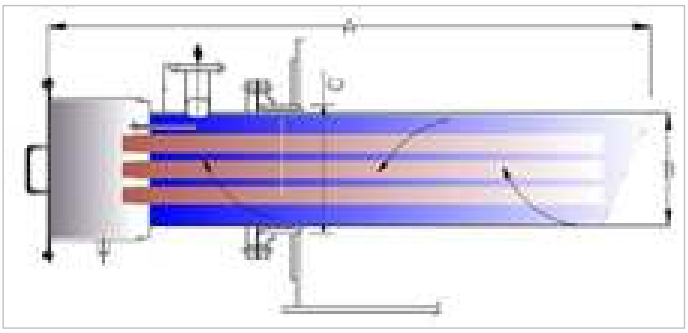

Over-the-Side Immersion Heaters

Over-the-Side Immersion Heaters are designed for installing in the top of a tank with the heated portion directly immersed along the side or at the bottom. This provides easy removal of the heater and ample working space inside the tank. These heaters are available with heating elements made of copper, steel, stainless steel, lead, cast iron, INCOLOY®, Titanium, Teflon® coated and quartz.

Screw Plug Immersion Heaters

Screw Plug Immersion Heaters consist of hair- pin bent tubular elements brazed or welded into a screw plug and provided with terminal enclosures for electrical connections. Screw plug immersion heaters are screwed directly through a threaded opening in a tank wall or into a matching half coupling.

Sheath Material: Copper, SS, INCLOY, Titanium

Screw plug material: MS,SS, Brass

Size: 1, 1-1/4, 2, 2-1/2 NPT nominal

Applications

- Hot water storage tanks
- Process air equipments
- Boiler equipments
- Cleaning and rinsing tanks
- Freeze protection of any fluid
- Heat transfer system
- Warming equipments
- Preheat all grades of oil
- Food processing equipment

Flexible Tank Heaters

Flexible Tank Heaters provide low-watt-density heating for viscous materials such as asphalt, fuel oil, pitch and tar, liquid sugar, molasses, lube oils, linseed oil and other heat-sensitive materials. These flexible heaters are particularly useful for storage tanks that are underground or when the tank ends are inaccessible for installation of more conventional heaters. They can be installed through the normal manhole opening of many large tanks above or below ground without requiring modification to the tank itself.

InLine / Circulation Heaters

These heaters are best suited and ideal for heating processing fluids that requires intermediate heating while maintaining a flow rate. Inline heater simply transfers the heat generated from electrical power into the target fluid.

Features

- Efficient Heat Transfer.
- Ease of installation.
- Low maintenance.
- Compatible with industrial piping standards.
- Wattage as per the process requirement.
- Thermostatic control/RTD provided for precise temperature control.
- Low Watt Density heaters used for longer life.
- Removable cartridge type heaters or tubular heaters.
- Totally sealed weather-proof terminal box.
- Custom Built.
- MOC : CS/SS
- Safety valve provided to release excess pressure.
- Drain provided for cleaning.
- Control panel (Optional).
- Available in voltages 415/230/110V.

Electric Thermic Fluid Heating System (Hot Oil System)

Thermic fluid systems are high temperature process heating systems, used for high performance industrial processes, often used as an alternative to high pressure steam. An attractive alternative due to much higher media operating temperatures at low pressure and also because of significant less overall operation costs.
Open skid /enclosed thermic fluid systems with range of design temperatures available. Custom designed as per the process requirement. The system comprises of heating unit, centrifugal circulating pump, de-aerator cum expansion tank, control panel, and valves/fittings. The piping and heating units are thermally insulated.

Features

- Highly efficient because the elements are totally immersed in thermal fluid and the jacket is fully insulated with high density insulation.
- Thermal fluid enters the heater from the lower right side. This unique circulation method (upward spiraling fluid) results in an even flow of thermal fluid within the vessel.
- Low Watt Density Elements Result in Low Film Temperatures and Long Element Life.
- Customized Controls Available.

Electric Hot Water Generators

Electric Hot Water Generators Horizontal/Vertical produces hot water. The system is fully automatic and 100% safe against any electric shock in the event of unusual conditions of operation.

Low watt density heaters are used for longer life of the heater. The system mainly comprises of heating unit, circulation pump and control panel with temperature indicator and Controller.

MOC: CS/SS, Electric and gas operated options available

Features

• Low maintenance • Energy efficiency • Rugged construction
• Pollution free

Shell and tube heat exchanger

Suitable for chemical, Pharma, Food and other process industries. This type of heat exchanger consists of a shell with a bundle of tubes inside it. One fluid runs through the tubes, and another fluid flows over the tubes (through the shell) to transfer heat between the two fluids. The set of tubes is called a tube bundle and comprises of several types of tubes: plain, longitudinally finned, etc.

Two fluids, of different starting temperatures, flow through the heat exchanger. One flows through the tubes (the tube side) and the other flows outside the tubes but inside the shell (the shell side). Heat is transferred from one fluid to the other through the tube walls, either from tube side to shell side or vice versa.

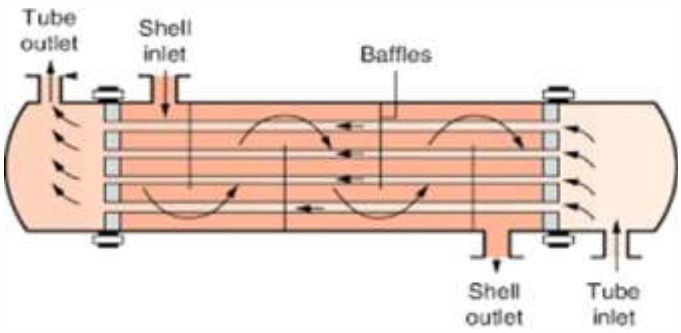

Waste Water Evaporator

Electrical & Gas operated options
Maximum evaporation rate 50L/hr.
Inner tank: 14 swg SS304, capacity 400L, with cover.
Outer tank: 16 swg CRCA, powder coated.
Standard vent stack: 300mm diameter, SS/CRCA, height 300mm Insulation thickness: 50mm
Supply: 415V/50HZ, 3 phase
Overall dimensions: L=950mm, w=950mm, H=1100mm (including stack)
Drain: 1" BSP socket with dead plug. Solid waste can be scooped out manually by opening top cover. Low height ensures easy cleaning of the tank.
Initial time required for evaporation: 60-90min.
Safety: Thermostatic control for heaters in case of high temperature.
Low level switch will shut off the system, in case the level is low.
Filling options: Through 2"BSP socket or manually by removing the lid.
The system is suitable for non-combustible material only.

Packaged System

Hot oil and water systems are self-contained heating and cooling packages that provide direct or indirect process heating. The systems are pre-engineered to include temperature and power controls, expansion tanks, heat exchanger, pumps, valves, gauges, and all necessary piping. This eliminates component selection and assembly.
Select from oil or water temperature control systems for circulation in a closed-loop process.

Heat Transfer Systems are used in process heating applications requiring closely controlled process temperatures. Systems are furnished complete with heaters, controls, pumps, valves and necessary plumbing.

- Indirect Heating
- Packaged Systems - Heat Transfer Systems
- Water and Water/Glycol Systems
- Non-Pressurized Hot Oil Heaters
- Pressurized Hot Oil Heaters
- Vaporizers

Heat Transfer Systems are used with:

- Jacketed Vessels and Tanks — containing waxes, paraffin, exotic chemicals including those having exothermic reactions, hot melt adhesives, resins, varnishes, paints, dyestuffs, molasses, vegetable oils and many other chemical or petrochemical products.
- Heated Rolls — for coating paper and paper products, spot carbonizing, vinyl bonding, bonding with hot melt adhesives, calendering and laminating.
- Heat Exchangers — for corrosive and non-corrosive fluids.
- Platens, Dies and Molds — for laminating wood and plastics, forming of carbon products, epoxy materials and Fiberglass, plastics extrusion, injection molding, molding rubber and plastic materials: vinyl bonding and bonding with hot melt adhesives.
- Pipeline Tracing — of viscous materials such as paints, fuel oils, asphalt and many other chemical and petrochemical products for antifreeze protection and/or maintaining pumping temperatures.
- Industrial Systems — such as snow melting, comfort heating and hot water supply and as standby equipment for industrial and commercial applications in case the supply of other fuels is curtailed.

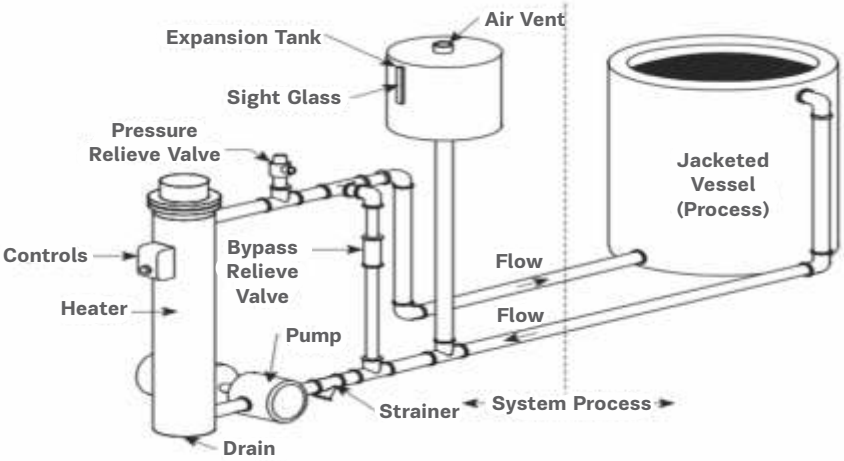

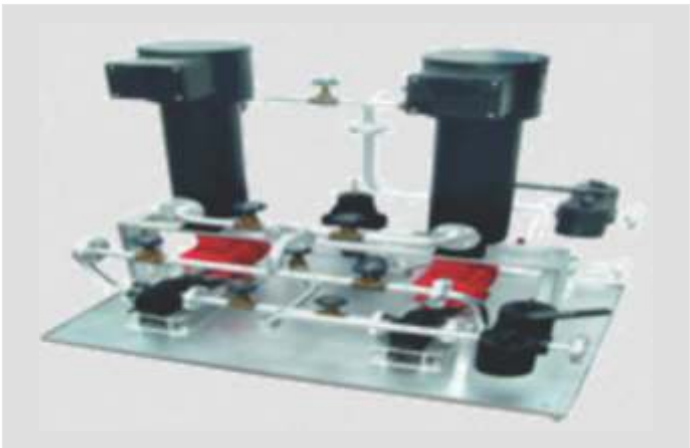

Duplex Pumping and Heating Unit

Heating and Pumping Unit

Hot Room / Warehouse Heating System

Large spaces like Warehouses, Industrial Sheds with High Ceilings, with continuous opening and closing of doors are not only expensive affair but one of the difficult areas to heat. Generally Warehouses, Factories, Huge Buildings Units use old and inefficient methods like Gas and Oil Heaters which are high Cost and require constant maintenance.

We Provides a wide range of heaters suited for all types of industrial heating due to their large heat spans and efficient running costs. These high quality heaters are ideal for warehouse heating as they have little pre-heating time and are also situated inside the building.

We offer controllers that are compatible with the heaters, allowing full controllability of the economical heaters. The reliable heaters are maintenance free so once installed, they can be left completely alone to provide desired temperature inside the warehouse /factory or comforting warmth to the workers in a working area.

We design the warehouse heating system in such a way that it maximises the use of floor space, improves energy efficiency, cuts down on heat losses and gives uniform temperature.

Designed to suit Warehouses, Industrial Buildings and Packing Areas

1. Heating material inside the warehouse which gets crystallized at low ambient.
2. Defrosting the frozen pulp/food products.
3. Comfort heating for working team inside the warehouse.
4. Comfort Heating of packing area.

Warm air heating is possibly the most common type of heating provided by either

1. Standalone units.
2. Recirculating type wall mounting units.
3. Roof suspended units.
4. Wall mounted internal fitted units.
5. External heating units with ducting.

Warm air system is the most effective solution for an industrial property such as a large warehouse, retail unit or Packing area. We design the systems in such a way that the heat distribution is even and there are no cold/hot pockets. Standalone units are mobile and can be shifted from one place to another depending upon the usage.
However, the recirculating type wall mounting units and roof suspended units ensure that the internal racking or staking is not disturbed. It also does not restrict the movement of material handling equipments inside warehouse. External heating units are ideal for the areas where wall mounting system can't be installed.

Features & Benefits of Warm Air Space Heating

- Energy efficient with low running costs.
- Even heat distribution.
- Programmable (optional).
- Multi area heating via Ductwork.
- Efficient control system ensures longer life of heating units and safety.

Pest Heat Treatment System

Dried food products such as flour, cereal, dried fruits, pastas and grains are infested by pests which leads to the contamination. Such facilities that produce, process handle or sell these products are at risk for infestation by stored product insects. These pests rapidly attack the dried foods in processing facilities and warehouses, destroying the products.

Heat treatment has been recognised as an effective method to destroy all life stages of insect and pests from eggs to adults. This is safe, effective and chemical free alternative and is becoming increasingly popular, especially with the phasing out of fumigation chemicals like methyl bromide and other toxic fumigants which are potentially harmful to people, pets and our environment. Worst yet, chemical pesticides are losing their effectiveness as pests , are building up resistance to the most commonly used treatment.

The process of heat involves safely raising the temperatures in an infested area to the level that is lethal to all insects. Heat penetrates into areas where chemicals and fumigants can't reach, providing a more thorough job of preventing future infestations. The minimum temperature of 55 deg C is necessary to destroy all life stages of insects in machines, cracks and crevices. The facility is then held at this temperature for 24 hours so that heat the thermal mass of structures to effectively kill all of the stored product insects.

We manufacture specialised Heat treatment machines suitable for

- Heat treatment of entire process area or warehouse, mobile system for use at multiple locations.
- Custom designed heat treatment of entire process area or warehouse, fixed type.
- Heat treatment of small areas , localized heating, export containers and shipping bins.

Entire facility heat treatment system (mobile) Comprises of
Heating units: Specially designed air convection type heating units having 360 degree air flow with 15m cable and industrial top. Number of units required depends upon the area.

Air circulation units for air uniform temperature with 15m cable and industrial top. Number of units required depends upon the area.
Non contact type temperature measuring device. Distribution panel with incomer and outgoing feeders.

Specifications

Heat load of each unit	18KW(9KW X2 heating banks)
Heater type	Air fin type
Control system	2 stage thermostatic control for heaters and DOL starter for blower.
Air volume of each unit	4500CMH

Custom designed heat treatment, fixed type, comprises of:
Externally installed heating units with high capacity blowers. Number of units depends upon the area.
Insulated duct for hot air delivery inside process area.
Distribution panel with incomer and outgoing feeders.
Temperature sensors at various locations inside process area

Heat treatment of selected areas , spot/localized heating, export containers, bins and silos

Although The Pest Heat Treatement System Is designed to heat treat an entire facility, a cost effective alternative is a spot or partial Heat Treatement. This method can effectively control the infestation in a selected area while the rest of area can operate uninterrupted.

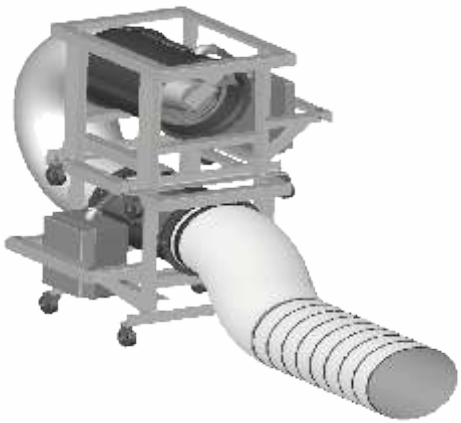

Air Duct Heaters

Integro manufactures different type of air duct heaters for various applications. The duct heaters are standard models and also custom designed for a particular application

Features

Long Life Metal Sheath Tubular Elements.

- High grade Incoloy sheath material for excellent corrosion/oxidation resistance at high operating temperatures.
- Sturdy Metal Sheath Elements minimize problems associated with open coil resistance wire units.
- High Purity Magnesium Oxide — The elements are filled with highest purity blends of magnesium oxide refractory (MgO) compacted to a rock hard density to ensure good thermal conductivity and electrical insulation resistance.
- Superior Grade Resistance Wire — The heart of each heating element is made of high quality resistance wire for maximum life.
- Low Watt Density Resistor Wire — Watt density on the heating coil is designed for low watt density operation by increasing the coil and wire diameter, and length of resistance wire to give maximum surface area and low operating coil surface temperature — providing longer coil life.
- Superior Construction at Element Bends — All element bends are repressed in hydraulic presses after bending to assure recompaction of refractory material to eliminate hot spots and electrical insulation voids.

Applications

- Heat Air for Drying and Curing operations up to 1200°F Air Temperature.
- Heat Treating.
- Reheating or Dehumidification.
- Aircraft Manufacturing.
- Autoclaves.
- Annealing.
- Drying.
- Paint Baking or Drying.
- Sterilizing.

Circular Air Duct Heaters

- Easy installation in circular duct sections
- Heavy gauge galvanized frame with 304L stainless steel sheathed heating elements
- Integral control panel
- Standard models with diameters from 125mm to 630mm
- Power rates of 500W to 18kW
- Standard voltages of 230V/1PH and 400V/3PH
- Built-in automatic and manual over temperature cutouts

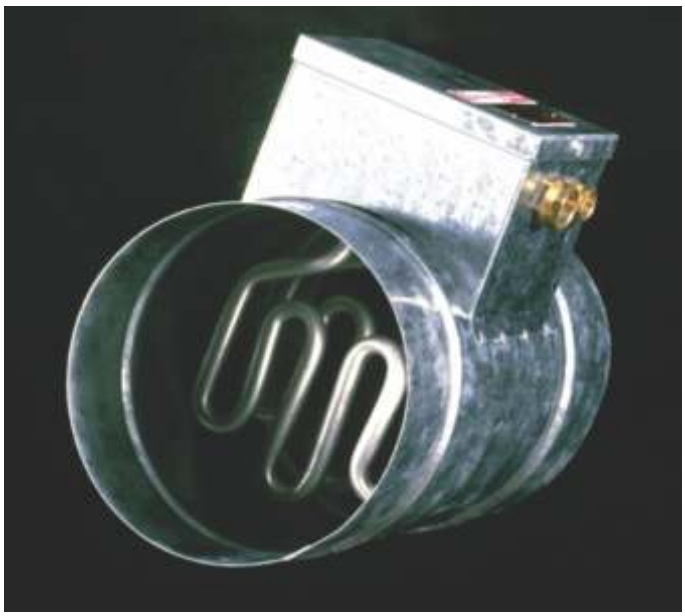

Applications

- Primary Room Heating (Central or Zone)
- Supplemental Room Heating (Heat Pumps)
- Air Tempering (Outside Air)
- Preheating (Make-Up Air)
- Reheating (Overcooling applications)
- Industrial and Commercial Buildings

Explosion Proof Duct Air Heater

Hazardous location duct heaters are designed for use in applications where hazardous gases or dusts may be present. They feature a heavy duty, rugged frame and heating elements. Stainless steel and painted heater frames can be designed for corrosive and marine environments. Configurations are offered with ATEX, IECEx, EAC, and CSA certifications where the hazardous location is either outside of or within the air stream. Duct heaters can also be configured for use in low ambient temperatures, down to -50°C (-58°F).

Explosion proof blower heater for hazardous locations

For providing heat in hazardous locations or corrosive, wet environments, we have a solution for your application. From fan forced designs, to natural convection, Integro offers a multitude of air heater designs for the harshest environments.

The fan-forced explosion proof unit heater is designed to heat areas classified as hazardous locations to provide primary or supplementary heating for comfort or freeze protection.

Fan forced unit heater certified for use in hazardous locations.

- 3-35 kW (10,200-119,420 Btuh) Power Ratings
- 208V-600V, Single and Three Phase Voltages Available
- cULus listed for Class I, Group C, D - Divisions 1 & 2 and Class II, Groups E, F, G - Divisions 1 & 2
- ATEX/IECEx II2G Exd IIB T3 and EAC Certifications Available

Cabinet - 14 gauge carbon steel with corrosion resistant polyester powder coat paint finish.

Adjustable Louvers - Individually adjustable to control the direction of airflow as needed.

Heating Elements - rugged, seamless, heavy-wall copper sheathed and thermally protected.

Factory Sealed Heat Exchanger - ASME designed, vacuum-sealed chamber, features heavy-walled steel riser tubes with integral aluminum fins and is filled with glycol-water heat transfer fluid.

Safety Pressure Relief Device - Integral to the heat exchanger, it is designed to prevent an over-pressure situation

Explosion Proof Ball Bearing Motor - Permanently lubricated and equipped with built-in thermal overload protection.

Epoxy Coated Aluminum Fan - Prevents sparking and corrosion.

Applications

- Sewage Treatment Plants
- Petrochemical Facilities, Oil Rigs
- Unattended Pumping Stations
- Chemical Storage and Handling Facilities
- Paint Storage Areas
- Grain Elevators
- Coal Preparation Plants

Metric Rectangular Duct Heater

- Slip-In or Flanged Mounting
- 321 stainless steel removable elements
- Alloy coated steel terminal enclosure rated to Ip42
- Integral auto and manual reset over temperature devices
- Standard models from 150mm x 150mm to 2000mm x 2000mm

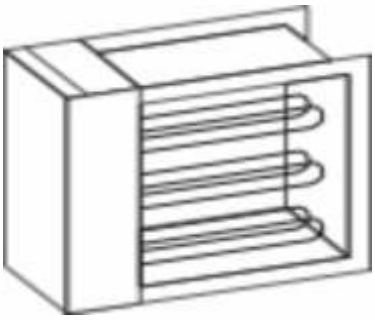

Applications

Primary Room Heating (Central or Zone)

- Supplemental Room Heating (Heat Pumps)
- Air Tempering (Outside Air)
- Preheating (Make-Up Air)
- Reheating (Overcooling applications)
- Industrial and Commercial Buildings

Finned Tubular and Finned Strip Heater

Ideal for both comfort and industrial process air applications. Fins greatly increase surface area and permit faster heat transfer to the air, resulting in lower element surface temperatures. Superior to open coil elements, the heating coil is completely encased in a metal sheath, minimizing a shock hazard due to accidental contact with the heater. The rigid metal sheath minimizes hot spots and electrical shorting, likely with open coil elements.

The heating coil is completely encased in a metal sheath. Ideal for anti-condensation heating of control panels and vibrating equipment like motors or generators. The finned heater is capable of being formed into various configurations to fit almost anywhere and are often ganged together to form banks of heaters. Both heaters come with an array of mounting options and terminations.

Applications

- Surface heating: Dies , Molds, Tanks, Piping
- Process air heating: Ovens, Drying cabinets, Baking ovens, Vacuum dehydrating ovens, Moisture protection for motors
- Dropping resistors: Line applications in railroads and load banks
- Winterizing: Hoppers, Conveyors, Ducts, Car heating systems, Thawing
- De humidifiers
- Space heating
- Packaging and Sealing, Food Warming Equipment
- Vulcanizing presses
- Laboratory equipment
- Air conditioning

Finned Tubular

Finned Strip

Strip and Ring Heaters (Component Heaters)

They can also be integrated into more complex heating systems to provide a complete thermal solution for your heating requirements. Shape and size most often are the determining factor in most heater applications.

Ring Heater

Disc Heater

Strip Heater

Explosion proof strip heater

Mica and mineral insulated strip heaters

Band Heater

Integro manufacturers the range of high quality industrial band heaters. We have custom manufactured products specifically design to meet individual customer requirements, as well as standard band heaters. From small size Nozzle Band heaters commonly used on plastics injection moulding machines to our robust, high temperature Tubular Heating Element band used on large industrial cylinder applications, such as Fluid Reactor Beds, Integro provides the right Band Heater solution for any cylindrical heating application.

Mica Band Heaters

Ceramic Band Heaters

Mineral Insulated Band Heaters

Cartridge Heaters

Cartridge heaters are an extraordinarily versatile and durable product that is used to heat a myriad different processes from heavy industrial – plastics and packaging applications to critical care medical devices and analytical test instruments. Cartridge heaters are an excellent choice to use as a conductive source for heating solid metal plates, blocks and dies or as a convective heat source for use in a variety of liquids and gases.

Insertion Cartridge Heaters

Ceramic core elements

Immersion
Cartridge Heaters

High Temperature
Cartridge Heaters

Radiant Heaters

These heaters are designed as heater modules with features that provide the greatest flexibility in application. A broad choice of physical lengths and ratings is available. Modules can be locked together with hinge-like connectors to create various shaped tunnel structures. Rugged heater case permits use with common structural materials as framing for heater banks using provided heater mounting clamp

Tubular Heaters

Tubular Heaters are the most versatile of all electric heating elements. They are capable of being formed into virtually any configuration. Tubular heating elements perform exceptional heat transfer by conduction, convection and radiation to heat liquids, air, gases, and surfaces.

Silicon Heaters

Silicone Rubber heaters are pre-designed and available in a wide array of sizes and ratings to meet customer needs.

Metallic drum melters

Suitable for high temperature requirement and faster heat-up of metallic drums.
Outer structure is made of CRCA/SS, cylindrical in shape and rugged construction. Pad type flexible heater having 80/20 nichrome wire as heating element is used. 50mm thick thermal insulation is provided to prevent the heat loss and to ensure that the outer structure of the drum is at low temperature for safe handling. Lid is provided to prevent the heat loss from the top. Castors are provided in the bottom for easy handling.
Standard capacity: 55 gallon (210L) drums
Separate base heater and drum heater with integral base heater for faster heat-up (optional)
Heating load: 12KW with the option of 3 stage heating (4/8/12KW)
Operating voltage : 110V/230V, 50HZ

Features

- Uniform heating , highly efficient, low maintenance, precise temperature control, mechanically strong, coated with high temperature paint for CRCA construction.
- Complete stainless steel units are also available and are highly recommended for use in corrosive areas, food and pharma applications.

Silicon Rubber Insulated Drum Heaters

Silicone Rubber Insulated Drum Heaters are constructed of silicone rubber reinforced Fiberglas® cloth laminated around resistance wire to provide flexible, moisture and chemical resistant heat. Drum heaters can withstand flexing without fear of premature failure.

Features

- Low watt density electrical resistance heat.
- All stock 120V products come with a 6 foot power cord and three-prong plug. 240V heaters do not include a plug.
- Optional built-in adjustable thermostat, 70 - 425 F for steel drums or 70 - 140 F for plastic drums.
- All models come with a heavy-duty spring assembly for attachment to your drum.
- Complete, ready to install and use as received.
- All grounded models feature a wire-mesh screen for ground-fault protection. Should the heater surface be punctured or damaged in any way, the grounding grid will provide electrical protection.

IBC heating jacket

The IBC heating jacket heats up the products inside IBC, reducing the viscosity of products or melting solids so they can be poured.
Use of Self -regulating type heating element for heat-up ensures the longer life ,trouble free operation and eliminates the possibility of hot spots ,even if the jacket is in loose contact with the IBC.
The jacket is fitted with a temperature controller for precise temperature control. Insulated top cover is provided to prevent heat loss and faster heat-up.

Clamp on Type Drum Heaters

Stainless Steel Clamp on heaters are ideal for applications where short heat up times and high temperatures need to be achieved. A low watt density multiform heating element is designed to wrap around the outside of the drum, held on by a stainless steel band with quick release toggle fasteners. Clamp on heaters are lightweight, portable and can be moved from drum to drum with ease. If more heat is required, extra clamp on heaters can easily be fitted.
The clamp on heater is ideal for applications where the material or solution to heat cannot come into direct contact with the heating element. This makes them best suited for closed drum situations, e.g. Solvents.

Mobile Heated Drum Trolley

Suitable for applications where the 200 litre standarddrum is required to be mobile with its contents heated. Heavy duty construction ensures the easy mobility of heated drums.
As the drum is strapped down in the horizontal position, the contents can be easily transferred into smaller containers while the underside of the drum is still being heated by fully guarded low watt density heating elements.
The heated drum trolley is for materials such as bitumen, waxes, fat, grease, resin, syrups, honey, etc. where heat is required to create flow.

Direct Drum Immersion Heaters

Drum immersion heaters are efficient and economical and are used where the solution, liquid or material can be heated with the element being in direct contact. Two installation designs are available.
The first is able to be inserted through the pouring hole at the top and the other fits straight into an open drum.

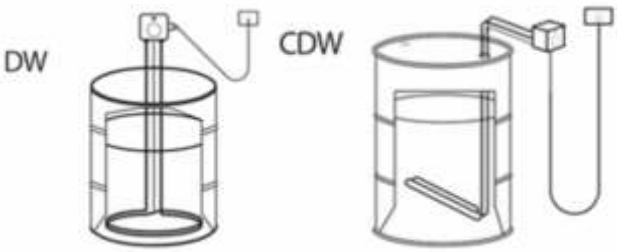

Hazardous Area Drum Heaters (ATEX, IECEx, ETL and CE rated)

Induction heaters
Wattage : 2750 watts,
IP66 (dust tight and power full jet water proof)
Self - limiting temperature: 123 oC

Can be used with (25, 50, 100 and 200 Litre drums)

Heating Jackets

Custom designed heating jacket for machines like blenders, mixers, vibros etc.

Construction

Integro's heating jackets are suitable to raise or maintain temperatures of the products in drums, vessels, tanks, and process instruments.
Heating jackets comprise of self- regulating heating cables fitted on a fiberglass cloth jacket. The jackets are pre-insulated and fabricated to the shape of the equipment/vessel to be heated. Having self- regulating technology and fitted with thermostatic control , the jackets are safe , having long life and trouble free operation. The jackets are fitted with Velcro and belts for easy fitment and removal .

Effective solution for maintaining temperature/ heat up of critical areas.
Heating Jacket for cylinder to prevent condensation.
Heating jacket for flanges, Valves and pipe spools.

- Non Jacketed Valves
- Pipe Spools
- Pumps
- Vessel
- Tanks etc.

Features

- Self Regulating heating elements
- Available in 110 and 240 VAC
- Frequency range: 50-60 Hz
- Highly efficient
- Maintenance Free
- Maintence Required Temperature

Hopper Heater

Integro Hopper heaters are designed to heatup the hopper surface which prevents the condensate/moisture formation and helps in easy removal of fly ash.

Types Available: Flexible & Mettalic Construction

Flexible type: Wire type heating element, silicon coated, is sandwiched between layers of aluminum coated fibre glass cloth . Eyelids are provided for mounting on the hopper.
Metallic type: Pad type heater or flexible heating pad is sandwiched between two metal sheets . The metal sheets are revitted and mounting arrangement is provided.

Features

- Easy to install
- Uniform heating
- Safe and longer life
- Custom designed as per the requirement.

Heating Chamber/Heating Oven

Integro manufacturers sturdy and efficient heating chamber with precise temperature control . The heating chambers are quick ship standard design for various application and also customized design. The models available are electrically operated and steam operated.

Applications

1. Heating chamber for drum heating
2. Heating chamber for valve body/ casting high temperature testing.
3. Heating Chamber for curing (Curing Oven)
4. Drying Chamber
5. Tray Dryer

Heating Chamber

Special substances used in production often need to be additionally heated or melted before they can be used in the production processes. These heated chambers have been specially designed for such applications.

Many materials require extended heating times for complete and proper meltdown; such as honey, malt extract, waxes , some chemicals, oils, grease, and various pharmaceutical products. This can only be achieved efficiently in heating chambers, heating drum or rooms.

Heating chambers are also used by metal industries for heat treatment, valve manufacturers for temperature testing of valve body, heating and drying moulds .

In addition to adherence to very stringent industrial requirements, safety and reliability with optimised performance is the hallmark of our heating chambers.

The large number of different-sized heating chambers available guarantees the accommodation of differing storage amounts and container sizes. The heating chambers are custom designed as per the requirement of the customer.

The heating capacities are calculated and realised to suit the requirements of the particular application.

Specifications

Types	Front openable type, Top openable type, Single door, Double door
Capacity	Custom designed
MOC / finish	CRCA(MS) with high temperature coating/ SS 304, SS 316
Media	Stationary/Transportable
Mounting	Base frame
Heating method	Electrical heaters, air fin type with fan forced re-circulated heated air system in standard units. Specially designed centrifugal blowers used for forced convection.
Insulation Type	LRB wool/Rockwool/calcium silicate
Caution	Suitable for non-combustible material only

Heating Chamber for valve body / casting high temperature testing

Custom designed heating chamber. Size, heating load, insulation thickness depends upon the job requirement. The chamber is suitable for high temperature requirement with precise control.
Heating is through high temperature air convection, using specially designed air fin heaters and centrifugal blower. Temperature recording option available. (Pic—our chamber Pic in leaflet)

Tray Drying Chamber

Integro's tray dryers are most suitable for drying the food products like candy, cashew, nuts etc.
The dryers are generally used in food, pharmaceutical, cosmetics, paint and other industries. The chambers are standard size and custom designed as per the requirement also.

Heating Chamber for curing (Curing Oven)

Heat-treatment process done in heating chamber that is used to accelerate a chemical reaction. This is performed by heating a raw material inside the chamber, to a specific temperature, in order to activate this reaction. Commonly used in curing raw material for coatings, adhesives, and rubber

Drying Chamber

Integro's drying chambers are highly effective to remove moisture from the raw material placed within it. The process involves heating of material to a particular temperature , then soaking for a particular time and finally cooling using ambient air. The drying chambers are commonly used in transformer core drying, resin coating drying, fire resistant door drying etc.

Application

The application of heat to pipes, tanks, instrument & associated equipment using electrical heating cable is known as electrical heat tracing. The heating cable follows the product flowing through pipe/equipment from starting to end and also applies heat to product contained within the vessels.

Electrical heat tracing is used to apply heat to :

- Liquids to prevent freezing and to reduce viscosity.
- Powders to prevent condensation from walls of the equipment that could result in clogging of the product.
- Gases to prevent hydration due to drop in gas pressure across pipework fittings such as valves.

Purpose of the heat tracing is mainly to maintain the product at a temperature that prevents processing problems and also can be used for heat-up of pipelines and equipments.

Purpose of Heat Tracing

Assuming Fluid Temperature is Higher Than Ambient Temperature

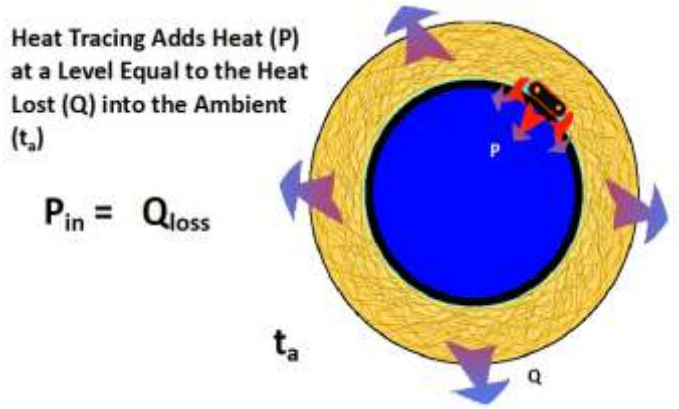

General Layout

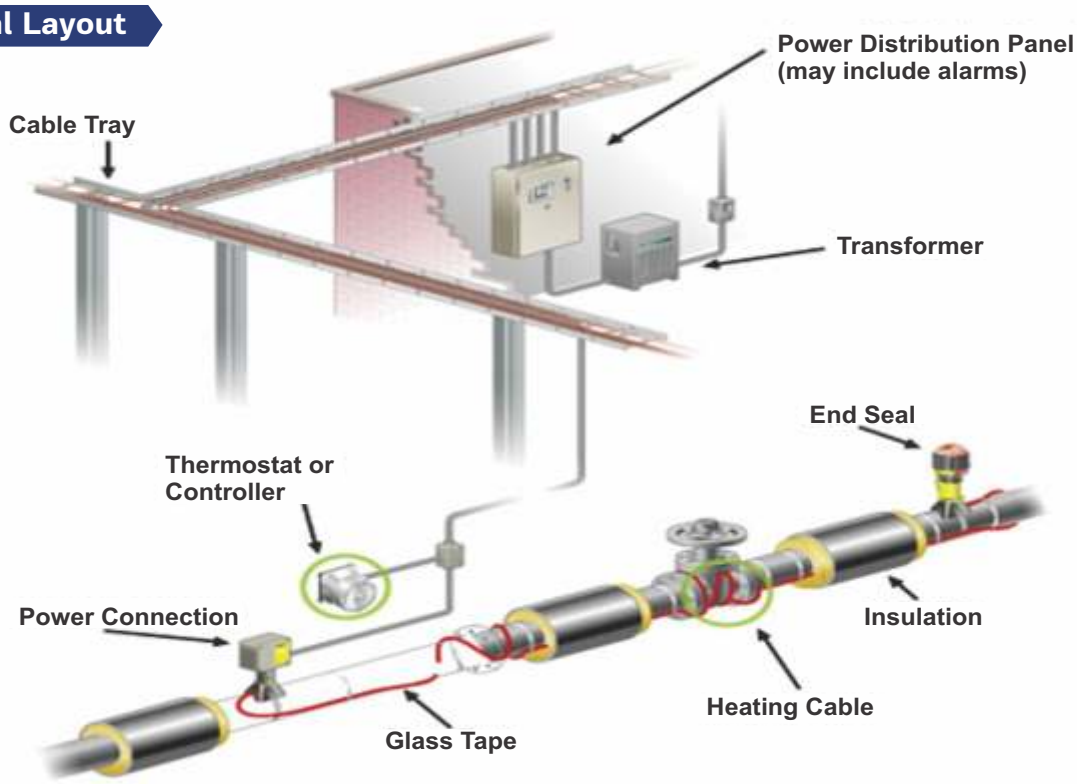

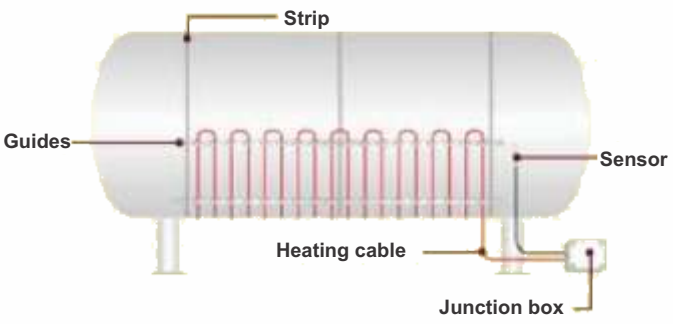

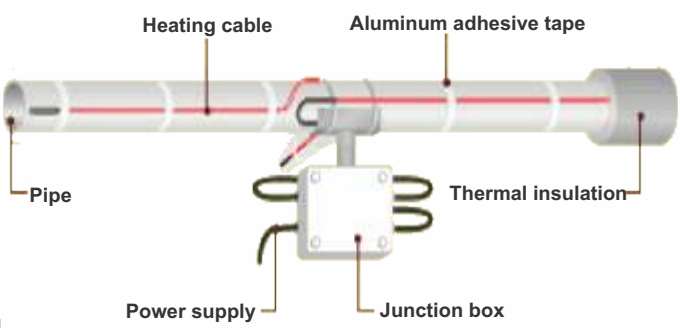

An electric heat tracing system generally comprises of :

- Heat tracing cables
- Junction Boxes for power/ end/splice/TEE
- Temperature sensors (RTD/Thermostat)
- Adhesive tapes
- Mounting stands and hardware
- Termination Kits

Heat Tracing Cables

Integro Provides highest range of heat tracing cables with highest output and highest withstand temperature. The heat tracers are having international approvals by FM, ATEX, IEC Ex, CSA, EAC for use in classified hazardous areas.

Self Regulating Heat Tracer

Series Long Line heat tracer

Parallel Constant wattage tracer

Junction Boxes

Integro provides junction boxes for terminating heat tracer for power, end, splice TEE and large size cable termination (field junction box). The Junction boxes are suitable for use in safe area, hazardous area and corrosive atmosphere. MOC: LM6, SS304, CRCA, FRP. Protection class IP65

Electrical system associated with electrical heat tracing comprises of:

- Control/Distribution panel
- Transformer (optional)
- Power and control cables
- Cable trays
- Glands and shrouds
- Earthing material

The range includes:

- Self regulating heat tracer
- Parallel Constant wattage heat tracer
- Series constant wattage heat tracer
- Mineral insulated (MI) constant wattage heating cable
- Power limiting heating cables
- Series Long line heating cable
- Skin effect heat tracing system
- Tubing bundle

Tubing Bundle

Skin effect heat tracing

Mineral Insulated heat tracer

Temperature Sensors

Specially designed “L “ shaped RTD (PT100) and enclosed thermostats , for installation on pipeline and tanks. Suitable for safe and hazardous area installation

Mounting stands and installation hardware

We provide specially designed mounting stands and hardware for mounting junction boxes, field junction boxes and temperature sensors. We also provide custom designed mounting stands for distribution panels . MOC: MS powder coated or SS304, as per site requirement.

Distribution Panel

We provide distribution panels for EHT, suitable for safe area, hazardous area , indoor type or outdoor type installation. The panels are custom designed as per the requirement, having incomer and outgoing feeders with safeties and protection devices along with temperature controllers. The panels can be provided with communication facility for communicating with PLC/SCADA and the entire system can be monitored and controlled from control room (Optional)

Flame Proof Control / Distribution Panel

Safe Area Control / Distribution Panel

Other accessories

We provide complete set of accessories like adhesive tapes, termination kits, glands and shrouds, power and control cable and warning labels required for EHT system.

Glass Adhesive Tape

Aluminum Adhesive Tape

FLP Cable Glands

Cable Shroud

Heat tracing Turnkey services

Integro's specialists and engineers provide turnkey solutions which includes design, detailed engineering, supply, installation and commissioning, supervision for installation. The dedicated professionals take project from concept through completion and review each project needs to make design recommendations based on the application and code requirement. We also undertake system health audit and maintenance for EHT system.

Design & detailed engineering: We design the system as per design code IEEE 515.We have an excellent design capabilities which includes

- Heat Loss calculations
- Heating cable selection based on heat loss calculations and other project inputs
- Selection of insulation material and design of insulation thickness
- Working out the BOQ
- Power cable selection
- Distribution panel design
- Automation and control

Thermal Insulation

Integro has successfully planned, managed and installed insulation for some of the largest and most sophisticated projects in India. We provide all types of thermal insulation materials and also undertake turnkey insulation contracts.

Rockwool/LRB wool

Nitrile Rubber

Calcium Silicate

Pipe Section

PUF

Aluminum Adhesive Tape

Oil Leak Detection System

Complete leak detection system comprising of

- Electronic module
- Fuel sensing cable
- Graphic display map
- Auxiliary equipment

The equipment shall automatically detect the presence of fuel at any point along the cables' length. The system sounds an alarm and locate the event with a digital display to within ± 1 foot (± 1 meter, metric version). The system has uniform sensitivity throughout its length. No more than 1 foot of fuel in contact with the cable, at a depth of 1/8 inch, required to cause an alarm. The system operate in such a manner that leaks cannot be suppressed or otherwise ignored once they are detected.

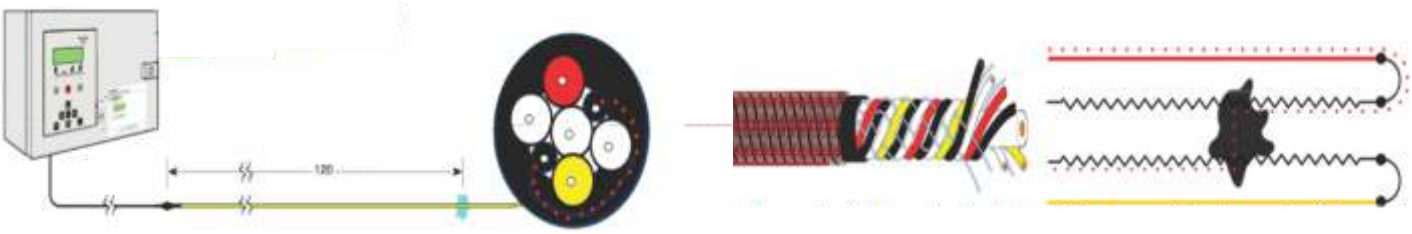

Cathodic Protection

Cathodic protection (CP) is a technique used to control the corrosion of a metal surface by making it the cathode of an electrochemical cell. A simple method of protection connects the metal to be protected to a more easily corroded "sacrificial metal" to act as the anode. The sacrificial metal then corrodes instead of the protected metal. For structures such as long pipelines, where passive galvanic cathodic protection is not adequate, an external DC electrical power source is used to provide sufficient current.

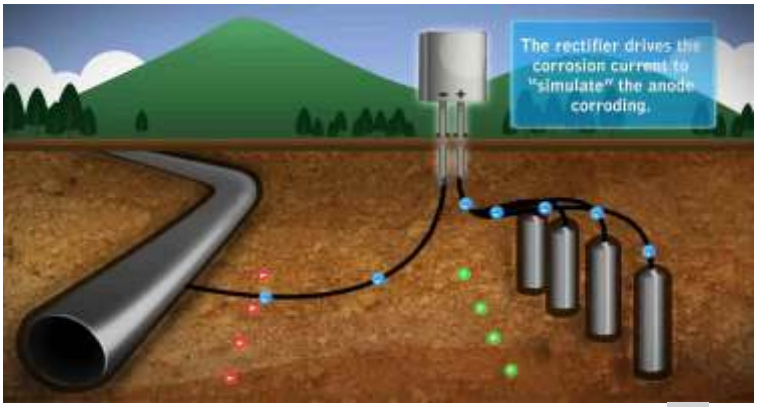

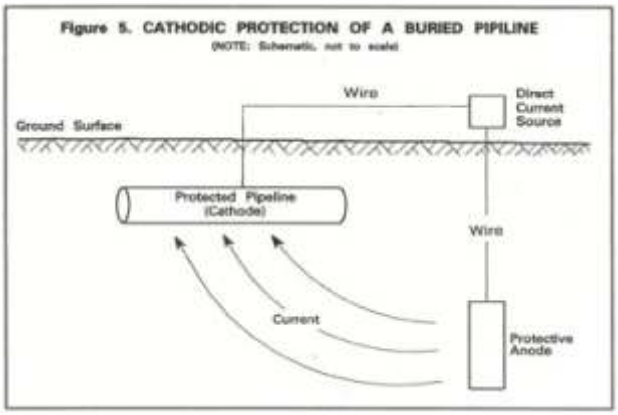

Components

Temperature Controller

Temperature Sensors

Temperature Transmitter

Line sensing Thermostat

Tubular level indicator

Float and board Level Indicator

Level transmitter

Level switch

Pressure Transmitter

Flow Meters

Load cells

Pipe Straps

Multiloop Controllers

Monitors and recorders

PLC Scada

Energy saving insulated jackets

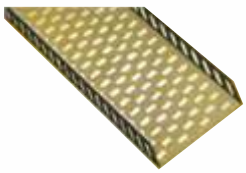

Perforated Cable Tray

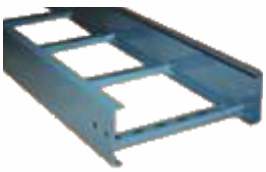

Ladder Type Cable Tray

Mesh Type

Junction Box

FABRICATION

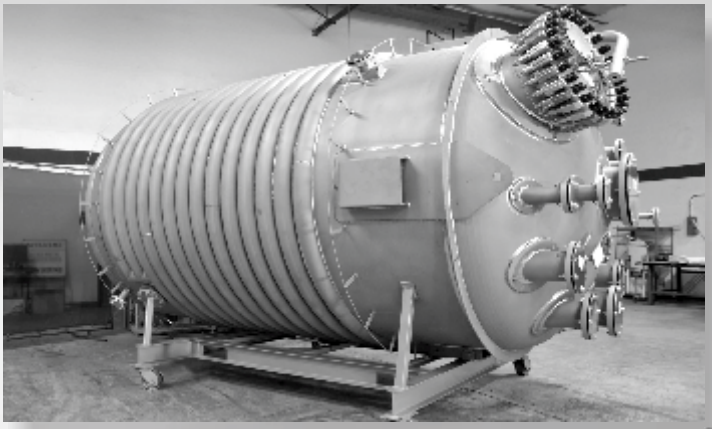

TANK / VESSEL

Integro is a custom fabricator, highly experienced in building steel storage tanks in both the shop and field. Our plant is fully equipped with advanced engineering and manufacturing tools. Our products are used throughout the process industry that includes Food, Pharma, Adhesive & Sealant, Battery, Chemical, Edible oil, Cosmetics and Personal care.

Integro is committed to meet all specialized application needs. We have invested into custom stainless steel fabrication by dedicating both a design team and the manufacturing
resources to develop custom products for the specialized applications of our customers.

Specifications

Types	Single or double wall (jacketed) with heat transfer surfaces including dimple jacket. Half pipe and internal pipe coils.(limpet coil) Agitator System Reactors Heat Traced tanks Insulated tanks
Capacity	Upto 100KL Shop built, above 100KL field fabricated
MOC/finish	SS 304, 304L, 316 with mil finish /high polish MS with or without lining.
Media	Stationary/Transportable
Working position	Horizontal/Vertical
Tank Shell Geometry	Cylindrical/Square
Head/Bottom Geometry	Conical Domed Flat
Tank Features	Single/Double Wall Insulated/ non insulated Leak Detectors (optional) Level Indicating System Overflow Vents Manways (top/side) Temperature Sensors (optional) Top Access and top railing Vented

Reactors

We manufacture complete range of reactors as per design code ,suitable for chemical reaction, solid dissolution, product mixing etc. The reactors are manufactured in various grades of stainless steel and also in CS/MS.

Limpet Coil Reactor

Limpet coil reactors are used to control the temperature of the reactants with the help of heating or cooling media circulated through coils surrounding the main vessel. Ideally suitable for medium heat transfer requirement.

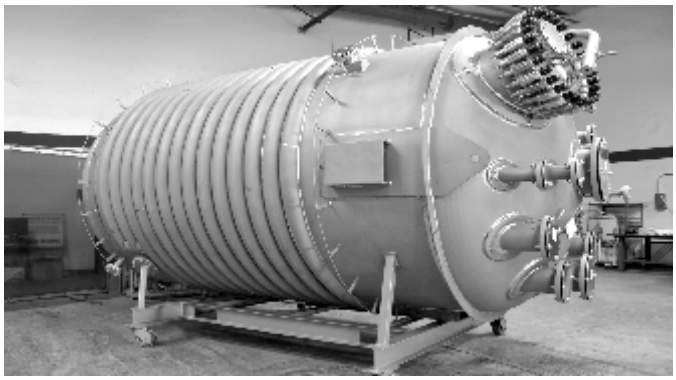

Air Receiver

We manufacture compressed Air Receivers & Compressed air storage tanks of various capacity. MOC : SS-304 / IS-2062 / IS-2002 . Fabricated as per IS-2825 / ASME SEC-VIII, DIV-1 codes.

Agitator/Mixing tanks

Agitator tanks are used for mixing and agitating liquids as well as dissolving and suspending solids within liquids. Our Agitators provide longer life and greater stability.

Jacketed Vessel

Jacketed vessel has a jacket surrounding the main vessel. Temperature during reaction is controlled by circulating heating or cooling media through the jacket. Ideally suitable for low temperature (100-130 degC)

LPG /Propane Storage Tanks

Electrical Panel

Integro specialises in the design and manufacture of high quality industrial control systems in all industry sectors.

We have an in- house facility for the design, manufacture and installation of array of electrical panels which includes

- Motor Control Centres (MCC)
- Process Control Panels
- Power control centres (PCC)
- Power Supply Distribution panels (PDB)
- Automatic Power factor Control panels (APFC)
- Change over panels
- Synchronising panels
- LT distribution panels
- Light Control panels
- VFD Control Panels
- Feeder Pillar panels

Custom Built Panel

Integro provides a solution-led service, designing custom electrical control systems and electrical control panels for a diverse range of industry sectors. This is useful for the clients whose requirements are not met with the standard products and require more expertise to produce something that satisfies their particular requirements, from simple push-button operation to more sophisticated and automated systems. Custom designed electrical control panels will provide the information you need at the time you want it and in the right place. We maintain close communications with our clients with regard to their special requirements and specifications, monitoring all aspects of the project from design to completion and final testing and commissioning.

General Features

Cable Entry	Top/Bottom
Enclosure MOC	CRCA Powder Coated/SS-304/316/Flame Proof(Suitable for Gas Gr.2A/2B/2C)
Size	Standard /Custom Designed
Mounting	Free Standing/Wall Mounted
Doors	Double/Single
Opening	Front /Front &Back
Enclosure type	Standard Non Compartmentalised/Compartmentalised/Fixed/Draw-out Type

TURNKEY PROJECTS & CONSULTANCY

Turnkey Projects

We undertake complete turnkey project from concept to commissioning, which includes design, detailed engineering, supply, installation and commissioning.

1. Inputs from the Client
2. Preparation of P&ID as per process requirement
3. Preparation of BOM and BOQ
4. Preparation of Equipment Layout as per system requirement and safety norms
5. Design of storage tanks as per applicable design codes
6. Design of day tanks, mixing tanks, reactors as per design code for process plants.
7. Design of other equipments like vaporizer, PRS, leak detection system, safeties and measuring equipments
8. Selection of pumps
9. Design of Unloading and transfer pumping system
10. Suitable Pipe sizing and layout upto user point
11. Heating system and thermal insulation design for tanks (if required)
12. Heat tracing design for tanks and pipeline (if required)
13. Electrical, instrumentation and automation design and layout.
14. Selection of equipments like load cells, measuring equipments, safety equipments
15. Supply of equipments
16. Installation and commissioning
17. Documentation, as built and statutory approvals (if required)
18. Handing over

We undertake turnkey projects for:

- HSD/FO storage and handling system
- LPG/Propane storage and transfer system
- Edible oil / vegetable oil storage and handling system for instant noodle/biscuit/snacks manufacturing plants.
- Storage and handling of AOS, LABSA, SLES, PG, Glycerine for soap and shampoo manufacturing industries.
- Chocolate paste storage, mixing and handling system for chocolate industry.
- All types of Viscous liquid storage and handling system

We also undertake the energy saving projects like:

- Integration of storage type hot water generator with input feed water through solar water heating system.
- Integration of boiler with solar input feed water through solar water heating system.

Process Heating, liquid (semi solid/ viscous/non viscous) handling, pumping and industrial piping.

- Design & Detail Engineering
- Drawing & Drafting Services
- Sourcing of Technology & Equipment
- Techno-commercial Appraisal of Process & System
- Feasibility Studies & System Development
- Plant Engineering & Utilities Services
- Turnkey Project Consultancy for Process Industries
- Planning, Scheduling & Project Management
- Equipment Selection, Sourcing & Procurement
- Site Engineering Services
- Commissioning & Plant Start-up

Design Services

Integro's technocrats work closely with you to design highly efficient, customized solutions for your industry. Our design services include:

- Process piping design
- Skidded system design
- Computer flow modeling and 3D assembly drawings
- Process and instrumentation diagrams
- Electrical design, controls, automation and programming
- Control-loop diagrams
- Process Heat loss/ heat load calculations and process heating design
- Workflow optimization and ergonomics design
- System reliability audits
- Troubleshooting and analysis
- Process system optimization
- Retrofits, upgrades and redundancy recommendations
- Equipment specification and procurement
- Complete design and total process engineering from conceptual study to finished fabrication drawings, including electrical, control instrumentation and programming

Project management Services (PMC)

Integro's project management services begin with project conceptualization and continue through formal turnover and system acceptance. Our project managers have extensive experience across the food, beverage, utility, chemical and general process industries.

Each project manager remains dedicated to the project until it is successfully completed. Their responsibilities include overseeing our full-time field installation crews, maintaining the highest quality workmanship, and ensuring compliance with sanitary design standards and safety regulations.

List of Some of Our Elite Cliente

INTEGRO ENGINEERS PVT. LTD.

Plot No. I-62, Site-C,
Surajpur Industrial Area,
Greater Noida,
Gautam Budh Nagar-201306
Uttar Pradesh INDIA

Office : +91 120 2569609 - 10
Mobile : +91 7042395754
E-mail : care@integrogroup.
Website : www.integrogroup.in

INTEGRO
GROUP
DELIVERING SOLUTION